200, 200-2, 9200 & 9200-2 SERIES DIMENSIONS

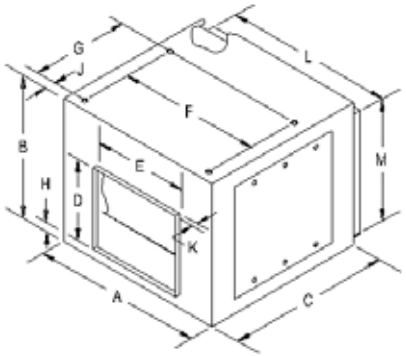

200 Series
Single Unit

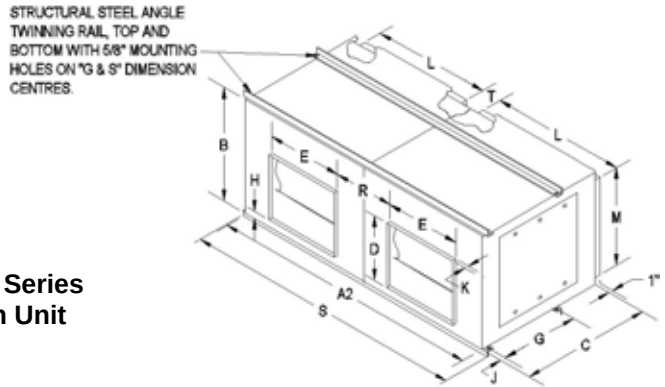

200-2 Series
Twin Unit

DIMENSIONS (inches)

NOTE: WT. SHOWN IS LESS MOTOR AND DRIVE

MODEL	A	A2	B	C	D	E	F	G	H	J	K	L	M	R	S	T	Unit Wt. (lbs.) Single	Unit Wt. (lbs.) Twin
207 & 207-2	18	36	15-3/8	23	8-1/4	9-3/16	14-1/2	9-5/8	1-1/4	1-1/4	7/8	15-7/8	13-3/8	8-13/16	38-1/4	2	43	112
209 & 209-2	21	42	18	23	10-1/4	11-13/16	17-1/2	11-3/4	1-1/4	1-3/4	7/8	19	16	9-3/16	44-1/4	2	55	142
210 & 210-2	22-1/4	44-1/2	20	24-3/4	11-3/8	13-1/8	18-3/4	13-3/8	1-1/4	1-3/4	7/8	20-1/4	18	9-1/8	46-3/4	2	65	152
212 & 212-2	27	54	23	27-1/2	13-7/16	15-5/8	23-1/2	16-1/8	1-1/4	1-3/4	7/8	25	21	11-3/8	56-1/4	2	82	191
215 & 215-2	33-1/2	67	28	32	15-7/8	18-5/8	28	19-1/2	2-5/8	1-3/4	7/8	30-1/2	25	14-7/8	69-1/4	3	140	287
218	41-1/2	- -	34	44	19-5/8	22-5/8	35	24	2-3/4	1-3/4	1-1/8	35-3/8	31-5/8	- -	- -	- -	158	- -

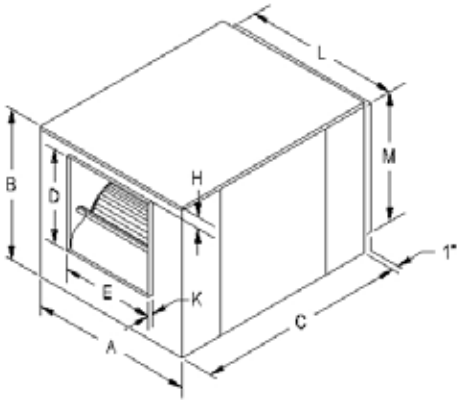

9200 Series
Single Unit

Note: Dimensions also applicable to 9200-VIB series with internal vibration isolation (not available in twinned configuration)

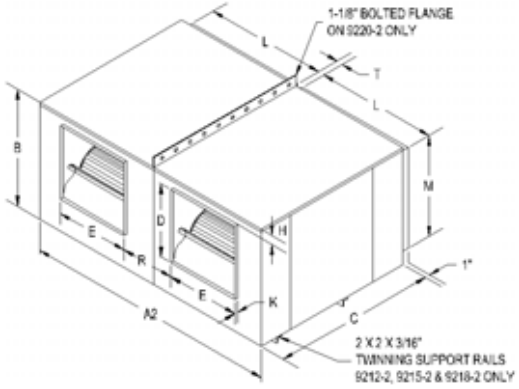

9200-2 Series
Twin Unit

MODEL	A	A2	B	C	D	E	H	K	L	M	R	T	Unit Wt. (lbs.) Single	Unit Wt. (lbs.) Twin
9209 & 9209-2	21	42	18	23	11-1/4	12-3/4	1	1-1/8	19	16	9-1/4	2	61	140
9210 & 9210-2	22-1/4	44-1/2	20	24-3/4	12-3/8	14-1/8	1	1-1/8	20-1/4	18	9-1/8	2	70	165
9212 & 9212-2	30-1/8	60-1/8	24-3/4	34	14-1/2	16-5/8	2-1/8	1-1/8	25-1/8	21-1/8	13-1/4	4-3/4	143	334
9215 & 9215-2	33-3/4	67-5/8	28-5/8	38-1/8	17	19-5/8	2-1/8	1-1/8	30-5/8	25-1/4	14-1/8	2-7/8	176	403
9218 & 9218-2	41-1/2	83-3/8	34	44	19-5/8	22-5/8	2-3/4	1-1/8	35-3/8	31-5/8	19	6-1/4	323	666
9220 & 9220-2	44-3/4	89-1/2	41-1/8	57-1/2	25-3/4	25-3/4	3	1-1/8	38-3/8	35-1/8	19	6-1/8	515	1048

F200A SERIES & F9220A FILTER SECTIONS, H9200 SERIES INTAKE HOODS

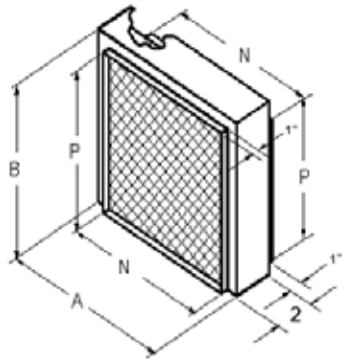

SERIES F200A FILTER SECTION

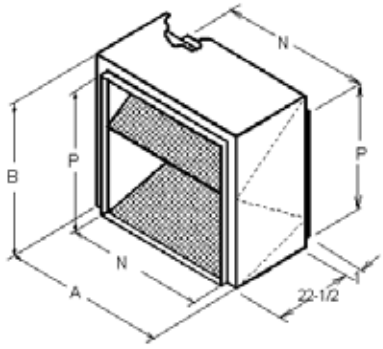

F9220A FILTER SECTION

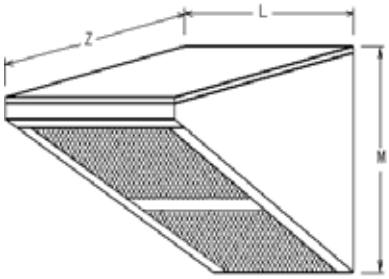

SERIES H9220 INTAKE HOOD

DIMENSIONS (inches)

MODEL	A	B	N	P	FILTER SIZE - (QTY.)	UNIT WT. (LBS.)	MODEL	L	M	Z	FILTER SIZE - (QTY.)	UNIT WT. (LBS.)
F207A	17-3/4	15-3/8	16	13-1/2	14-1/8 x 16-5/8 (1)	11	**N/A**	- -	- -	- -	- - - -	- -
F209A	21	18	19-1/8	16-1/8	16-3/4 x 19-7/8 (1)	12	**H9209**	19-1/4	16-9/16	21-1/4	16 x 24 (1)	14
F210A	22-1/4	20	20-3/8	18-1/8	18-3/4 x 21-1/8 (1)	14	**H9210**	20-1/2	18-9/16	25-3/4	15 x 20 (2)	16
F212A	27	23	25-1/8	21-1/8	21-3/4 x 25-7/8 (1)	16	**H9212**	25-3/8	21-9/16	30-3/4	20 x 25 & 16 x 25 (2)	27
F215A	32-1/2	26-3/4	30-5/8	25-1/8	25-3/4 x 31 (1)	21	**H9215**	31-3/16	25-13/16	33-1/2	20 x 28-1/2 (2)	38
F218A	37	33-1/4	35-1/4	31-1/2	32-1/4 x 35-7/8 (1)	46	**H9218**	35-5/8	32-11/16	40-1/4	20 x 25 (2) & 16 x 25 (2)	50
F9220A	39-3/4	37-1/4	38-1/2	35-1/4	20 x 25 (6)	64	**H9220**	38-5/8	35-9/16	22	SEE F9220A	40

ALL FILTER SECTIONS HAVE 1" ALUMINUM FILTERS

INTAKE HOODS (EXCEPT H9220 HAVE 1" ALUMINUM FILTERS. H9220 HAS SCREENED INLET FOR USE WITH F9220A FILTER SECTION.

NOTE: TWIN DUCT BLOWERS REQUIRE TWO FILTER SECTIONS AND/OR TWO HOOD SECTIONS

PRESSURE DROP in. wg WITH 1" ALUMINUM FILTERS

	FILTER SECTION							HOOD SECTION				
CFM	**F207A**	**F209A**	**F210A**	**F212A**	**F215A**	**F218A**	**F9220A**	**H9209**	**H9210**	**H9212**	**H9215**	**H9218**
300	.010	.007						.013				
400	.018	.010						.018				
600	.030	.020	.013					.030	.018			
800	.067	.026	.022	.012				.043	.025	.015		
1000	.117	.042	.028	.020				.065	.034	.019		
1200	.171	.073	.041	.023	.012			.093	.043	.023	.017	
1300		.091	.053	.025	.015			.107	.049	.027	.019	
1400		.109	.067	.029	.018			.122	.055	.030	.020	
1600		.145	.095	.038	.021	.011			.072	.035	.025	.015
1800		.182	.124	.054	.024	.013			.091	.042	.030	.017
2000			.154	.073	.026	.017			.109	.048	.034	.019
2500				.126	.042	.023				.073	.045	.025
3000				.182	.073	.028				.103	.061	.032
3500					.110	.040				.131	.082	.040
4000					.147	.057	.023				.107	.048
4500					.182	.082	.027				.130	.059
5000						.107	.032					.072
5500						.132	.036					.088
6000						.157	.040					.103
6500						.182	.046					.117
7000							.052					.131
7500							.058					
8000							.065					
8500							.074					
9000							.082					
10000							.101					
11000							.118					
12000							.137					
MAXIMUM CFM												
	1250	1800	2200	3500	4500	6700	12000	1450	2200	3500	4500	7000

Hot Water, Chilled Water & DX Coils

Coils are designed to be mounted on the inlet of 200 or 9200 series duct blowers, or to each other. The modular concept provides designers with the flexibility and convenience of assembling readily available components into a system to meet their application heating and cooling requirements.

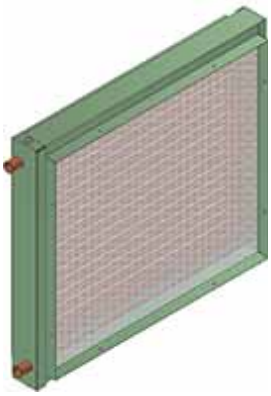

2 Row Hot Water Coil

4 Row DX or Chilled Water Coil

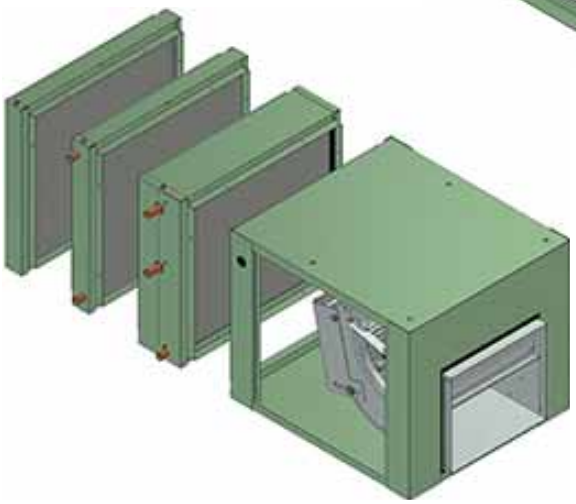

Typical system comprising of Filter Section, Heating Coil, DX Coil and Duct Blower

(side panel removed for illustrative purposes)

	Matching Coil Sections				
Duct Blower	**Heating Coil**	**Chilled Water Coil**	**DX Coil**	**Filter**	**Intake Hood**
207	HC-07	CW-07	DX-18-07	F207A	N/A
209 or 9209	HC-09	CW-09	DX-24-09	F209A	H9209
210 or 9210	HC-10	CW-10	DX-30/36-10	F210A	H9210
212 or 9212	HC-12	CW-12	DX-42/48-12	F212A	H9212
215 or 9215	HC-15	CW-15	DX-60-15	F215A	H9215

200 & 9200 SERIES PERFORMANCE DATA

Model 207

MAXIMUM: 3/4 HP, 145T FRAME

3/4" SHAFT WHEEL DIA. = 7.75" TIP SPEED = 2.03 x RPM

	OUTLET VELOCITY	1/8" SP			1/4" SP			1/2" SP			3/4" SP			1" SP			1-1/2" SP			2" SP			2-1/2" SP		
CFM	FPM	RPM	BHP	SONES	RPM	BHP	SONES	RPM	BHP	SONES	RPM	BHP	SONES	RPM	BHP	SONES	RPM	BHP	SONES	RPM	BHP	SONES	RPM	BHP	SONES
300	569	526	0.01	1.3	719	0.03	- -	1026	0.06	- -	1247	0.09	- -	1433	0.12	- -	1733	0.19	- -	1980	0.26	- -	2189	0.33	- -
400	759	567	0.02	1.8	737	0.04	3.9	1019	0.07	- -	1257	0.11	- -	1448	0.15	- -	1761	0.24	- -	2020	0.33	- -	2242	0.42	- -
500	949	636	0.04	3.1	770	0.05	4.2	1027	0.09	9.3	1246	0.13	- -	1450	0.18	- -	1775	0.28	- -	2038	0.39	- -	2271	0.50	- -
600	1139	719	0.06	4.3	822	0.07	6.2	1051	0.12	10.1	1255	0.16	11.8	1437	0.20	- -	1777	0.32	- -	2051	0.45	- -	2286	0.58	- -
700	1329	806	0.08	6.4	894	0.10	8.7	1086	0.15	10.8	1278	0.20	12.5	1451	0.24	14.3	1763	0.35	22	2052	0.50	- -	2295	0.65	- -
800	1519	894	0.12	8.6	975	0.14	10.1	1134	0.18	11.7	1308	0.24	12.9	1473	0.30	15.7	1768	0.41	23	2038	0.54	- -	2292	0.71	- -
900	1709	983	0.16	10.8	1062	0.19	12.1	1198	0.23	12.9	1350	0.29	13.8	1503	0.36	20.7	1785	0.48	24	2038	0.61	- -	- -	- -	- -
1000	1899	1073	0.21	12.6	1149	0.24	13.3	1272	0.29	14.7	1400	0.35	15.1	1540	0.43	17.6	1809	0.57	26	2053	0.70	- -	- -	- -	- -
1100	2089	1165	0.27	14.1	1236	0.31	14.8	1352	0.37	15.6	1465	0.43	17.7	1588	0.50	19.8	1840	0.66	29	- -	- -	- -	- -	- -	- -
1200	2279	1257	0.35	15.8	1325	0.39	16.5	1438	0.46	17.6	1539	0.52	23	1644	0.58	23	- -	- -	- -	- -	- -	- -	- -	- -	- -
1300	2469	1351	0.43	17.9	1414	0.48	18.5	1526	0.56	21	1618	0.62	37	1713	0.69	27	- -	- -	- -	- -	- -	- -	- -	- -	- -
1400	2659	1445	0.53	22	1505	0.59	22	1613	0.67	24	1701	0.74	26	- -	- -	- -	- -	- -	- -	- -	- -	- -	- -	- -	- -

Model 207-2

MAXIMUM: 1-1/2 HP, 145T FRAME

3/4" SHAFT WHEEL DIA. = 7.75" TIP SPEED = 2.03 x RPM

	OUTLET VELOCITY	1/8" SP			1/4" SP			1/2" SP			3/4" SP			1" SP			1-1/2" SP			2" SP			2-1/2" SP		
CFM	FPM	RPM	BHP	SONES	RPM	BHP	SONES	RPM	BHP	SONES	RPM	BHP	SONES	RPM	BHP	SONES	RPM	BHP	SONES	RPM	BHP	SONES	RPM	BHP	SONES
600	569	526	0.03	1.9	719	0.05	3.8	1026	0.11	11.1	1247	0.18	- -	1433	0.24	- -	1733	0.38	- -	1980	0.51	- -	2189	0.67	- -
800	759	567	0.05	2.5	737	0.07	4.9	1019	0.14	10.8	1257	0.22	14.1	1448	0.30	16.8	1761	0.48	27	2020	0.65	- -	2242	0.83	- -
1000	949	636	0.07	3.9	770	0.11	5.3	1027	0.18	11.2	1246	0.25	13.7	1450	0.36	17.0	1775	0.57	28	2038	0.79	- -	2271	1.00	- -
1200	1139	719	0.11	5.3	822	0.15	7.6	1051	0.23	12.1	1255	0.31	14.0	1437	0.40	16.3	1777	0.64	28	2051	0.90	- -	2286	1.16	- -
1400	1329	806	0.17	7.9	894	0.20	10.5	1086	0.30	12.9	1278	0.39	15.0	1451	0.49	17.1	1763	0.71	27	2052	1.00	- -	2295	1.29	- -
1600	1519	894	0.24	10.6	975	0.28	12.1	1134	0.37	14.0	1308	0.49	15.4	1473	0.60	18.8	1768	0.82	28	2038	1.08	- -	2292	1.42	- -
1800	1709	983	0.32	13.0	1062	0.37	14.5	1198	0.47	15.5	1350	0.59	16.5	1503	0.72	25	1785	0.97	29	2038	1.22	- -	- -	- -	- -
2000	1899	1073	0.43	15.1	1149	0.49	16.0	1272	0.59	17.6	1400	0.70	18.1	1540	0.85	21	1809	1.13	32	2053	1.40	- -	- -	- -	- -
2200	2089	1165	0.55	16.8	1236	0.63	17.7	1352	0.74	18.7	1465	0.85	21	1588	1.00	24	1840	1.32	35	- -	- -	- -	- -	- -	- -
2400	2279	1257	0.70	18.9	1325	0.79	19.7	1438	0.91	21	1539	1.03	28	1644	1.17	28	- -	- -	- -	- -	- -	- -	- -	- -	- -
2600	2469	1351	0.87	21	1414	0.97	22	1526	1.12	25	1618	1.24	- -	1713	1.38	33	- -	- -	- -	- -	- -	- -	- -	- -	- -
2800	2659	1445	1.07	26	1505	1.17	27	1613	1.35	29	1701	1.49	- -	- -	- -	- -	- -	- -	- -	- -	- -	- -	- -	- -	- -

Model 209 & 9209

209 - MAXIMUM: 3/4 HP, 145T FRAME

9209 - MAXIMUM: 1-1/2 HP, 145T FRAME

3/4" SHAFT WHEEL DIA. = 10.13" TIP SPEED = 2.65 x RPM

	OUTLET VELOCITY	1/8" SP			1/4" SP			1/2" SP			3/4" SP			1" SP			1-1/2" SP			2" SP			2-1/2" SP		
CFM	FPM	RPM	BHP	SONES	RPM	BHP	SONES	RPM	BHP	SONES	RPM	BHP	SONES	RPM	BHP	SONES	RPM	BHP	SONES	RPM	BHP	SONES	RPM	BHP	SONES
600	713	417	0.03	1.6	557	0.05	2.2	798	0.10	5.7	977	0.15	8.5	1120	0.21	10.8	1353	0.33	- -	1548	0.45	- -	1717	0.59	- -
700	832	440	0.04	1.3	566	0.06	2.5	791	0.11	5.4	979	0.17	8.6	1128	0.23	11.1	1367	0.37	- -	1564	0.50	- -	1736	0.65	- -
800	951	468	0.06	1.8	581	0.07	3.8	786	0.12	5.2	974	0.19	8.4	1130	0.26	11.2	1379	0.41	15.8	1578	0.56	- -	1751	0.72	- -
900	1070	499	0.07	2.2	601	0.10	3.1	792	0.14	5.5	964	0.21	8.1	1126	0.28	11.0	1384	0.45	16.2	1590	0.61	19.7	**1764**	**0.79**	- -
1000	1189	534	0.09	2.7	625	0.12	4.1	802	0.17	5.8	964	0.23	8.1	1118	0.31	10.7	1384	0.48	16.2	1596	0.67	20	**1777**	**0.85**	**24**
1100	1308	573	0.12	3.4	653	0.15	6.9	816	0.20	6.7	970	0.27	8.3	1112	0.34	10.5	1379	0.52	15.8	1598	0.72	20	**1784**	**0.92**	**24**
1200	1427	613	0.15	4.5	682	0.18	10.3	834	0.24	8.0	979	0.30	8.6	1115	0.38	10.6	1371	0.56	15.3	**1596**	**0.76**	**20**	**1787**	**0.98**	**24**
1300	1546	654	0.19	6.1	714	0.22	5.2	856	0.28	7.0	992	0.35	8.9	1122	0.42	10.9	1362	0.60	14.8	**1590**	**0.81**	**19.7**	**1786**	**1.04**	**24**
1400	1665	696	0.23	7.0	750	0.26	5.9	881	0.33	7.6	1009	0.40	9.4	1132	0.48	11.3	1362	0.65	14.8	**1582**	**0.87**	**19.3**	**1781**	**1.10**	**24**
1500	1783	739	0.28	7.7	788	0.31	6.7	907	0.38	8.2	1028	0.46	10.1	1145	0.53	11.9	1367	0.71	15.1	**1573**	**0.92**	**18.8**	**1775**	**1.17**	**24**
1600	1902	782	0.34	8.3	828	0.37	7.5	936	0.44	8.9	1050	0.52	10.4	1162	0.60	13.6	**1375**	**0.78**	**15.6**	**1573**	**0.99**	**18.8**	**1765**	**1.23**	**23**
1700	2021	826	0.40	8.8	868	0.43	8.3	966	0.51	9.6	1075	0.59	11.1	1181	0.68	17.5	**1385**	**0.86**	**16.2**	**1576**	**1.07**	**19.0**	**1758**	**1.31**	**23**

Model 209-2 & 9209-2

MAXIMUM: 1-1/2 HP, 145T FRAME

3/4" SHAFT WHEEL DIA. = 10.13" TIP SPEED = 2.65 x RPM

	OUTLET VELOCITY	1/8" SP			1/4" SP			1/2" SP			3/4" SP			1" SP			1-1/2" SP			2" SP			2-1/2" SP		
CFM	FPM	RPM	BHP	SONES	RPM	BHP	SONES	RPM	BHP	SONES	RPM	BHP	SONES	RPM	BHP	SONES	RPM	BHP	SONES	RPM	BHP	SONES	RPM	BHP	SONES
1200	713	417	0.06	2.3	557	0.09	2.9	798	0.19	6.8	977	0.30	10.3	1120	0.41	13.0	1353	0.65	- -	1548	0.90	- -	1717	1.17	- -
1400	832	440	0.08	1.8	566	0.12	3.0	791	0.22	6.6	979	0.34	10.3	1128	0.47	13.4	1367	0.73	- -	1564	1.01	- -	1736	1.30	- -
1600	951	468	0.11	2.4	581	0.15	3.8	786	0.25	6.4	974	0.37	10.2	1130	0.52	13.5	1379	0.81	18.9	1578	1.12	- -	1751	1.43	- -
1800	1070	499	0.14	2.9	601	0.19	3.9	792	0.29	6.6	964	0.41	9.8	1126	0.56	13.3	1384	0.89	19.3	1590	1.23	24	- -	- -	- -
2000	1189	534	0.19	3.5	625	0.24	5.0	802	0.34	7.0	964	0.47	9.8	1118	0.62	12.9	1384	0.97	19.3	1596	1.33	24	- -	- -	- -
2200	1308	573	0.24	4.3	653	0.29	8.5	816	0.40	8.1	970	0.53	10.0	1112	0.68	12.6	1379	1.03	18.9	1598	1.44	24	- -	- -	- -
2400	1427	613	0.30	5.6	682	0.36	12.4	834	0.48	9.7	979	0.61	10.3	1115	0.76	12.7	1371	1.11	18.3	- -	- -	- -	- -	- -	- -
2600	1546	654	0.38	7.4	714	0.43	6.3	856	0.56	8.4	992	0.69	10.8	1122	0.85	13.1	1362	1.20	17.7	- -	- -	- -	- -	- -	- -
2800	1665	696	0.46	8.4	750	0.52	7.1	881	0.66	9.2	1009	0.80	11.4	1132	0.95	13.6	1362	1.31	17.8	- -	- -	- -	- -	- -	- -
3000	1783	739	0.56	9.4	788	0.62	8.1	907	0.77	9.9	1028	0.92	12.1	1145	1.06	14.4	1367	1.43	18.1	- -	- -	- -	- -	- -	- -
3200	1902	782	0.67	10.1	828	0.73	9.0	936	0.88	10.8	1050	1.05	12.5	1162	1.20	16.3	- -	- -	- -	- -	- -	- -	- -	- -	- -
3400	2021	826	0.80	10.6	868	0.86	10.0	966	1.02	11.5	1075	1.19	13.5	1181	1.36	21	- -	- -	- -	- -	- -	- -	- -	- -	- -

Performance certified is for installation Type B - Free inlet, Ducted outlet. Power rating bhp does not include transmission losses.
Performance ratings do not include the effects of appurtenances (accessories). The sound ratings shown are loudness values in fan sones at 5 ft. (1.5m) in a hemispherical free field calculated per AMCA Standard 301. Values shown are for Installation Type B: free inlet fan sone levels.
Sone values not documented in unlisted areas. Twin unit data is derived from tests of single width fans.

SI CONVERSION FACTOR

CFM x .472 = L/s SP x .249 = kPa

200 & 9200 SERIES PERFORMANCE DATA

Model 210 & 9210

MAXIMUM: 1-1/2 HP, 145T FRAME
3/4" SHAFT WHEEL DIA. = 11.44" TIP SPEED = 2.99 x RPM

	OUTLET VELOCITY	1/8" SP			1/4" SP			1/2" SP			3/4" SP			1" SP			1-1/2" SP			2" SP			2-1/2" SP		
CFM	FPM	RPM	BHP	SONES	RPM	BHP	SONES	RPM	BHP	SONES	RPM	BHP	SONES	RPM	BHP	SONES	RPM	BHP	SONES	RPM	BHP	SONES	RPM	BHP	SONES
800	771	388	0.04	2.0	511	0.07	3.1	709	0.12	5.9	861	0.18	8.8	987	0.25	- -	1196	0.41	- -	1371	0.58	- -	1524	0.76	- -
900	868	403	0.05	2.5	520	0.08	3.7	712	0.14	6.0	866	0.21	9.0	993	0.27	11.8	1204	0.44	- -	1380	0.62	- -	1533	0.81	- -
1000	964	422	0.06	2.4	531	0.09	4.6	713	0.15	6.1	869	0.23	9.1	998	0.31	12.0	1210	0.47	- -	1387	0.66	- -	1542	0.87	- -
1100	1060	445	0.08	3.0	544	0.11	6.0	719	0.18	6.3	872	0.26	9.2	1002	0.34	12.2	1216	0.50	16.7	1394	0.70	- -	1550	0.92	- -
1200	1157	470	0.10	3.8	559	0.13	8.7	728	0.20	6.8	873	0.28	9.3	1005	0.37	12.4	1221	0.55	17.0	1400	0.74	21	1557	0.97	- -
1300	1253	497	0.12	5.4	575	0.15	4.6	738	0.23	7.2	878	0.31	9.5	1007	0.40	12.5	1225	0.61	17.2	1405	0.79	21	1563	1.02	- -
1400	1350	525	0.15	4.9	593	0.18	5.3	749	0.26	7.8	886	0.34	9.9	1009	0.43	12.6	1229	0.65	17.4	1410	0.86	21	1568	1.07	25
1500	1446	553	0.18	5.6	616	0.21	6.5	762	0.29	8.4	895	0.38	10.3	1013	0.47	12.8	1232	0.70	17.6	1415	0.93	22	1573	1.14	26
1600	1543	582	0.22	6.7	640	0.25	8.0	776	0.33	9.0	905	0.42	10.8	1021	0.52	13.2	1234	0.74	17.7	1419	1.00	22	1578	1.23	26
1700	1639	612	0.25	7.8	666	0.29	9.6	791	0.37	9.6	916	0.46	11.3	1030	0.57	13.7	1235	0.79	17.8	1422	1.06	22	1583	1.32	27
1800	1736	642	0.29	8.8	693	0.33	11.0	807	0.41	10.2	928	0.51	11.9	1040	0.62	14.3	1239	0.84	18.0	1424	1.12	22	1587	1.40	27
1900	1832	672	0.34	9.7	720	0.38	12.1	824	0.46	10.4	942	0.56	12.6	1051	0.68	14.9	1246	0.91	18.4	1426	1.17	22	1590	1.48	27

Model 210-2 & 9210-2

MAXIMUM: 1-1/2 HP, 145T FRAME
3/4" SHAFT WHEEL DIA. = 11.44" TIP SPEED = 2.99 x RPM

	OUTLET VELOCITY	1/8" SP			1/4" SP			1/2" SP			3/4" SP			1" SP			1-1/2" SP			2" SP			2-1/2" SP		
CFM	FPM	RPM	BHP	SONES	RPM	BHP	SONES	RPM	BHP	SONES	RPM	BHP	SONES	RPM	BHP	SONES	RPM	BHP	SONES	RPM	BHP	SONES	RPM	BHP	SONES
1600	771	388	0.08	2.7	511	0.13	3.9	709	0.25	7.2	861	0.36	10.7	987	0.51	- -	1196	0.82	- -	1371	1.16	- -	- -	- -	- -
1800	868	403	0.10	3.2	520	0.16	4.6	712	0.28	7.3	866	0.42	11.0	993	0.55	14.3	1204	0.88	- -	1380	1.24	- -	- -	- -	- -
2000	964	422	0.13	3.1	531	0.18	5.6	713	0.31	7.4	869	0.47	11.1	998	0.61	14.5	1210	0.94	- -	1387	1.32	- -	- -	- -	- -
2200	1060	445	0.16	3.7	544	0.22	7.3	719	0.35	7.7	872	0.51	11.3	1002	0.69	14.8	1216	1.00	20	1394	1.40	- -	- -	- -	- -
2400	1157	470	0.20	4.7	559	0.26	10.6	728	0.40	8.2	873	0.55	11.4	1005	0.75	15.0	1221	1.10	20	1400	1.49	- -	- -	- -	- -
2600	1253	497	0.25	6.6	575	0.30	5.7	738	0.45	8.8	878	0.61	11.7	1007	0.80	15.1	1225	1.21	21	- -	- -	- -	- -	- -	- -
2800	1350	525	0.30	6.0	593	0.35	6.5	749	0.51	9.4	886	0.69	12.1	1009	0.86	15.2	1229	1.31	21	- -	- -	- -	- -	- -	- -
3000	1446	553	0.36	6.8	616	0.42	7.9	762	0.58	10.1	895	0.76	12.6	1013	0.95	15.4	1232	1.40	21	- -	- -	- -	- -	- -	- -
3200	1543	582	0.43	8.0	640	0.49	9.7	776	0.65	10.9	905	0.84	13.1	1021	1.04	15.8	1234	1.48	21	- -	- -	- -	- -	- -	- -
3400	1639	612	0.51	9.3	666	0.57	11.5	791	0.73	11.6	916	0.93	13.7	1030	1.14	16.4	- -	- -	- -	- -	- -	- -	- -	- -	- -
3600	1736	642	0.59	10.6	693	0.66	13.3	807	0.82	12.4	928	1.02	14.4	1040	1.25	17.0	- -	- -	- -	- -	- -	- -	- -	- -	- -
3800	1832	672	0.68	11.7	720	0.77	14.5	824	0.91	12.7	942	1.13	15.2	1051	1.35	17.8	- -	- -	- -	- -	- -	- -	- -	- -	- -

Model 212 & 9212

212 - 3/4" SHAFT MAXIMUM: 1-1/2 HP. 145T FRAME WHEEL DIA. = 12.50"
9212 - 1" SHAFT MAXIMUM: 3 HP, 145T FRAME TIP SPEED = 3.27 x RPM

	OUTLET VELOCITY	1/8" SP			1/4" SP			1/2" SP			3/4" SP			1" SP			1-1/2" SP			2" SP			2-1/2" SP		
CFM	FPM	RPM	BHP	SONES	RPM	BHP	SONES	RPM	BHP	SONES	RPM	BHP	SONES	RPM	BHP	SONES	RPM	BHP	SONES	RPM	BHP	SONES	RPM	BHP	SONES
1200	823	386	0.07	2.0	486	0.10	3.4	649	0.18	- -	816	0.31	- -	945	0.42	- -	1141	0.64	- -	1300	0.87	- -	1439	1.11	- -
1400	960	415	0.09	2.8	507	0.14	4.0	661	0.22	- -	797	0.33	- -	941	0.47	- -	1155	0.75	- -	1319	1.00	- -	1460	1.26	- -
1600	1097	445	0.13	4.1	533	0.17	5.0	679	0.27	10.8	801	0.37	- -	921	0.50	- -	1161	0.84	- -	1333	1.14	- -	1478	1.43	- -
1800	1234	477	0.17	6.2	560	0.22	6.4	698	0.33	9.3	817	0.44	10.5	922	0.55	- -	1144	0.89	- -	1340	1.26	- -	**1491**	**1.60**	- -
2000	1371	511	0.22	5.1	589	0.27	7.7	720	0.39	9.9	836	0.51	10.4	937	0.64	- -	1125	0.93	- -	1329	1.34	- -	**1498**	**1.76**	- -
2200	1508	546	0.28	6.0	620	0.34	9.0	745	0.47	10.6	855	0.60	11.0	955	0.73	13.5	1129	1.02	- -	1309	1.39	- -	**1490**	**1.87**	- -
2400	1646	582	0.34	7.3	651	0.41	10.0	772	0.55	11.4	877	0.69	11.7	973	0.84	14.0	1143	1.13	- -	1298	1.47	- -	**1469**	**1.93**	- -
2600	1783	620	0.43	8.4	684	0.50	10.7	801	0.65	12.3	901	0.80	12.6	993	0.95	14.6	1161	1.27	- -	**1307**	**1.61**	- -	**1452**	**2.00**	- -
2800	1920	658	0.52	9.3	718	0.60	9.8	830	0.76	13.1	927	0.92	13.5	1015	1.08	15.2	1179	1.42	18.3	**1322**	**1.77**	- -	**1456**	**2.15**	- -
3000	2057	697	0.63	10.3	753	0.71	11.0	859	0.88	14.0	954	1.05	14.6	1040	1.23	16.0	**1198**	**1.59**	**18.9**	**1341**	**1.96**	- -	**1468**	**2.34**	- -
3200	2194	737	0.75	11.5	788	0.84	12.3	890	1.02	15.0	983	1.20	16.1	1066	1.39	17.1	**1219**	**1.77**	**19.6**	**1359**	**2.16**	**23**	**1485**	**2.55**	- -
3400	2331	777	0.89	12.9	825	0.98	13.4	922	1.18	16.0	1012	1.37	18.4	**1093**	**1.56**	**19.1**	**1240**	**1.96**	**20**	**1377**	**2.37**	**24**	**1504**	**2.79**	- -

Model 212-2 & 9212-2

212-2 - 3/4" SHAFT MAXIMUM: 1-1/2 HP, 145T FRAME WHEEL DIA. = 12.50"
9212-2 - 1" SHAFT MAXIMUM: 3 HP, 145 T FRAME TIP SPEED = 3.27 x RPM

	OUTLET VELOCITY	1/8" SP			1/4" SP			1/2" SP			3/4" SP			1" SP			1-1/2" SP			2" SP			2-1/2" SP		
CFM	FPM	RPM	BHP	SONES	RPM	BHP	SONES	RPM	BHP	SONES	RPM	BHP	SONES	RPM	BHP	SONES	RPM	BHP	SONES	RPM	BHP	SONES	RPM	BHP	SONES
2400	823	386	0.14	2.7	486	0.21	4.2	649	0.37	- -	816	0.61	- -	945	0.85	- -	1141	1.29	- -	**1300**	**1.73**	- -	**1439**	**2.22**	- -
2800	960	415	0.19	3.5	507	0.27	5.0	661	0.44	- -	797	0.65	- -	941	0.95	- -	1155	1.49	- -	**1319**	**2.00**	- -	**1460**	**2.52**	- -
3200	1097	445	0.26	5.0	533	0.35	6.2	679	0.54	8.0	801	0.74	- -	921	1.00	- -	**1161**	**1.68**	**- -**	**1333**	**2.27**	- -	**1478**	**2.86**	- -
3600	1234	477	0.34	7.5	560	0.44	7.8	698	0.65	8.7	817	0.87	12.7	922	1.11	- -	**1144**	**1.77**	- -	**1340**	**2.53**	- -	**- -**	**- -**	- -
4000	1371	511	0.43	6.2	589	0.55	9.4	720	0.78	9.5	836	1.02	12.6	937	1.27	- -	**1125**	**1.85**	- -	**1329**	**2.69**	- -	- -	- -	- -
4400	1508	546	0.55	7.3	620	0.68	10.7	745	0.93	10.4	855	1.19	13.4	955	1.46	16.1	**1129**	**2.03**	- -	**1309**	**2.79**	- -	- -	- -	- -
4800	1646	582	0.69	8.7	651	0.83	12.0	772	1.10	11.5	877	1.38	14.2	**973**	**1.67**	**16.7**	**1143**	**2.27**	- -	**1298**	**2.94**	- -	- -	- -	- -
5200	1783	620	0.85	10.1	684	1.00	12.9	801	1.30	12.6	**901**	**1.60**	**15.2**	**993**	**1.91**	**17.4**	**1161**	**2.55**	- -	- -	- -	- -	- -	- -	- -
5600	1920	658	1.04	11.3	718	1.20	12.0	**830**	**1.52**	**13.9**	**927**	**1.84**	**16.2**	**1015**	**2.17**	**18.2**	**1179**	**2.85**	**22**	- -	- -	- -	- -	- -	- -
6000	2057	697	1.25	12.6	753	1.42	13.4	**859**	**1.77**	**15.3**	**954**	**2.11**	**17.4**	**1040**	**2.46**	**19.2**	- -	- -	- -	- -	- -	- -	- -	- -	- -
6400	2194	737	1.50	14.0	**788**	**1.67**	**14.8**	**890**	**2.04**	**17.0**	**983**	**2.41**	**19.2**	**1066**	**2.78**	**20**	- -	- -	- -	- -	- -	- -	- -	- -	- -
6800	2331	**777**	**1.78**	**15.6**	**825**	**1.96**	**16.1**	**922**	**2.35**	**19.9**	**1012**	**2.74**	**22**	**- -**	**- -**	**- -**	- -	- -	- -	- -	- -	- -	- -	- -	- -

Performance certified is for installation Type B - Free inlet, Ducted outlet. Power rating bhp does not include transmission losses.
Performance ratings do not include the effects of appurtenances (accessories). The sound ratings shown are loudness values in fan sones at 5 ft. (1.5m) in a hemi-spherical free field calculated per AMCA Standard 301. Values shown are for Installation Type B: free inlet fan sone levels.
Sone values not documented in unlisted areas. Twin unit data is derived from tests of single width fans.

SI CONVERSION FACTOR

CFM x .472 = L/s SP x .249 = kPa

200 & 9200 SERIES PERFORMANCE DATA

Model 215 & 9215

215 - 1" SHAFT MAXIMUM: 3 HP, 184T FRAME
9215 - 1" SHAFT, MAXIMUM: 5 HP, 184T FRAME

WHEEL DIA. = 15.25"
TIP SPEED = 3.99 x RPM

	OUTLET VELOCITY	1/8" SP			1/4" SP			1/2" SP			3/4" SP			1" SP			1-1/2" SP			2" SP			2-1/2" SP		
CFM	FPM	RPM	BHP	SONES	RPM	BHP	SONES	RPM	BHP	SONES	RPM	BHP	SONES	RPM	BHP	SONES	RPM	BHP	SONES	RPM	BHP	SONES	RPM	BHP	SONES
1800	876	273	0.10	2.7	370	0.18	4.8	510	0.29	8.8	617	0.42	11.3	705	0.57	14.1	850	0.88	18.3	969	1.20	21	1071	1.52	24
1900	925	278	0.11	3.4	373	0.19	5.0	510	0.32	9.0	620	0.44	11.5	708	0.60	14.3	854	0.93	18.6	974	1.26	22	1077	1.59	25
2000	974	284	0.12	4.2	375	0.20	4.5	510	0.35	9.0	622	0.47	11.7	711	0.62	14.6	857	0.97	19.0	978	1.32	22	1083	1.67	25
2100	1022	290	0.14	2.9	375	0.21	4.6	510	0.38	9.0	623	0.50	11.8	714	0.65	14.9	860	1.01	19.3	982	1.37	22	1088	1.74	26
2200	1071	297	0.15	3.5	376	0.22	4.6	511	0.41	9.2	624	0.54	11.9	716	0.68	15.1	863	1.05	19.7	986	1.43	23	1092	1.81	27
2300	1120	305	0.17	4.2	378	0.23	4.7	514	0.44	10.0	624	0.58	11.9	718	0.72	15.3	866	1.09	20	989	1.48	23	1096	1.89	27
2400	1168	314	0.19	4.8	381	0.25	4.8	517	0.46	10.8	624	0.62	12.0	720	0.76	15.5	869	1.13	20	992	1.54	24	1100	1.96	27
2500	1217	323	0.21	5.5	385	0.27	5.1	521	0.49	12.0	624	0.67	12.0	721	0.81	15.5	872	1.17	21	995	1.59	24	1104	2.02	28
2600	1266	332	0.23	4.6	389	0.29	5.3	525	0.51	13.3	625	0.71	12.1	721	0.86	15.5	875	1.21	21	999	1.64	25	1107	2.09	29
2700	1314	342	0.26	5.1	394	0.32	5.6	528	0.54	14.3	626	0.76	12.2	721	0.92	15.5	877	1.26	22	1002	1.69	25	1110	2.16	29
2800	1363	352	0.29	5.6	400	0.34	5.9	530	0.56	9.0	629	0.80	12.6	721	0.98	15.5	879	1.31	22	1005	1.75	25	1113	2.22	29
2900	1412	363	0.31	6.0	406	0.37	6.2	531	0.58	9.1	632	0.84	13.0	721	1.04	15.5	881	1.37	23	1007	1.81	26	1116	2.29	29
3000	1461	373	0.35	6.4	413	0.40	6.5	531	0.60	9.2	636	0.87	13.8	722	1.09	15.6	882	1.44	23	1010	1.87	26	1119	2.36	30
3100	1509	384	0.38	6.7	420	0.43	7.1	532	0.62	9.2	640	0.91	14.5	723	1.15	15.8	883	1.51	23	1012	1.93	27	1122	2.42	30
3200	1558	394	0.42	7.0	427	0.46	8.8	533	0.65	9.3	643	0.95	15.0	725	1.21	15.9	883	1.59	23	1015	2.00	27	1125	2.49	31
3300	1607	405	0.45	7.2	436	0.50	10.3	536	0.68	9.5	646	0.98	15.6	728	1.26	16.2	883	1.68	23	1016	2.07	27	1128	2.57	32
3400	1655	416	0.49	7.4	445	0.54	12.0	539	0.71	9.7	649	1.01	13.6	732	1.31	16.6	883	1.77	23	1018	2.16	28	1130	2.64	32
3500	1704	427	0.54	7.8	454	0.58	14.1	543	0.75	10.0	650	1.04	13.7	736	1.36	16.9	883	1.86	23	1019	2.25	28	1133	2.73	32
3600	1753	437	0.58	8.3	463	0.62	16.4	547	0.80	10.7	651	1.08	13.8	740	1.41	17.3	883	1.94	23	1019	2.35	28	1135	2.81	32
3700	1801	448	0.63	8.8	473	0.67	9.4	552	0.84	11.6	651	1.10	13.8	743	1.46	17.5	884	2.03	24	1020	2.46	28	1137	2.91	33
3800	1850	459	0.68	9.4	483	0.72	10.0	557	0.89	12.5	652	1.14	13.9	746	1.51	17.8	886	2.12	25	1020	2.57	28	**1138**	**3.01**	**33**
3900	1899	470	0.73	9.9	493	0.78	10.8	562	0.94	13.6	653	1.18	13.9	749	1.55	17.6	888	2.20	26	1020	2.69	28	**1139**	**3.13**	**33**
4000	1948	481	0.79	10.5	503	0.83	11.9	568	0.99	14.9	655	1.23	14.1	750	1.59	17.7	891	2.29	27	1020	2.81	28	**1140**	**3.25**	**33**
4100	1996	492	0.85	11.1	513	0.89	13.1	574	1.04	16.1	658	1.28	14.3	751	1.63	17.8	894	2.36	29	1020	2.93	28	**1140**	**3.38**	**33**
4200	2045	503	0.91	11.7	523	0.95	14.2	581	1.10	12.5	661	1.33	14.5	751	1.67	17.8	898	2.44	32	**1020**	**3.05**	**28**	**1140**	**3.52**	**33**
4300	2094	514	0.97	12.4	534	1.02	15.4	588	1.16	13.1	665	1.39	14.9	752	1.71	17.8	902	2.52	35	**1022**	**3.16**	**29**	**1140**	**3.67**	**33**
4400	2142	526	1.04	12.9	544	1.09	16.6	595	1.22	13.8	670	1.46	15.8	753	1.76	17.9	906	2.59	39	**1023**	**3.28**	**29**	**1140**	**3.81**	**33**

Model 215-2 & 9215-2

215-2 - 1" SHAFT MAXIMUM: 3 HP, 184T FRAME
9215-2 - 1" SHAFT MAXIMUM: 5 HP, 184T FRAME

WHEEL DIA. = 15.25"
TIP SPEED = 3.99 x RPM

	OUTLET VELOCITY	1/8" SP			1/4" SP			1/2" SP			3/4" SP			1" SP			1-1/2" SP			2" SP			2-1/2" SP		
CFM	FPM	RPM	BHP	SONES	RPM	BHP	SONES	RPM	BHP	SONES	RPM	BHP	SONES	RPM	BHP	SONES	RPM	BHP	SONES	RPM	BHP	SONES	RPM	BHP	SONES
3600	876	273	0.20	3.5	370	0.35	5.8	510	0.59	10.2	617	0.84	13.2	705	1.14	16.2	850	1.77	20	969	2.40	24	**1071**	**3.04**	**27**
3800	925	278	0.22	4.2	373	0.38	6.0	510	0.64	10.5	620	0.89	13.6	708	1.19	16.5	854	1.85	21	974	2.52	24	**1077**	**3.19**	**28**
4000	974	284	0.25	5.0	375	0.40	5.6	510	0.70	10.5	622	0.94	13.8	711	1.25	16.8	857	1.93	21	978	2.63	25	**1083**	**3.34**	**28**
4200	1022	290	0.28	3.8	375	0.42	5.7	510	0.76	10.5	623	1.00	13.9	714	1.31	17.1	860	2.01	22	982	2.75	25	**1088**	**3.49**	**29**
4400	1071	297	0.31	4.5	376	0.44	5.7	511	0.82	10.8	624	1.07	14.0	716	1.37	17.3	863	2.09	22	986	2.86	26	**1092**	**3.63**	**30**
4600	1120	305	0.34	5.2	378	0.47	5.8	514	0.87	11.5	624	1.16	14.0	718	1.44	17.5	866	2.17	22	989	2.96	26	**1096**	**3.77**	**30**
4800	1168	314	0.38	5.8	381	0.50	6.0	517	0.93	12.4	624	1.24	14.0	720	1.52	17.7	869	2.25	23	**992**	**3.07**	**26**	**1100**	**3.91**	**31**
5000	1217	323	0.42	6.5	385	0.54	6.2	521	0.98	13.6	624	1.33	14.0	721	1.61	17.8	872	2.33	23	**995**	**3.18**	**27**	**1104**	**4.05**	**31**
5200	1266	333	0.47	5.8	389	0.59	6.5	525	1.03	14.8	625	1.42	14.1	721	1.72	17.8	875	2.42	24	**999**	**3.28**	**28**	**1107**	**4.18**	**32**
5400	1314	342	0.52	6.3	394	0.63	6.8	528	1.07	15.8	626	1.51	14.2	721	1.83	17.8	877	2.52	24	**1002**	**3.39**	**28**	**1110**	**4.31**	**32**
5600	1363	352	0.57	6.8	400	0.68	7.1	530	1.11	10.8	629	1.59	14.6	721	1.95	17.8	879	2.63	25	**1005**	**3.50**	**28**	**1113**	**4.44**	**33**
5800	1412	363	0.63	7.3	406	0.74	7.5	531	1.15	10.9	632	1.67	15.2	721	2.07	17.8	881	2.75	26	**1007**	**3.61**	**29**	**1116**	**4.58**	**33**
6000	1461	373	0.69	7.7	413	0.80	7.8	531	1.19	11.0	636	1.75	15.9	722	2.19	18.0	882	2.88	26	**1010**	**3.73**	**29**	**1119**	**4.71**	**34**
6200	1509	384	0.76	8.1	420	0.86	8.5	532	1.24	11.0	640	1.82	16.6	723	2.30	18.0	**883**	**3.02**	**26**	**1013**	**3.86**	**30**	**1122**	**4.84**	**34**
6400	1558	394	0.83	8.4	428	0.93	10.2	533	1.29	11.1	643	1.89	17.1	725	2.42	18.2	**883**	**3.18**	**26**	**1015**	**4.00**	**30**	**1125**	**4.98**	**35**
6600	1607	405	0.91	8.7	436	1.00	11.8	536	1.36	11.4	647	1.96	17.8	728	2.52	18.5	**883**	**3.35**	**26**	**1017**	**4.15**	**31**	- -	- -	- -
6800	1655	416	0.99	9.0	445	1.08	13.5	539	1.43	11.7	649	2.03	15.8	732	2.63	18.9	**883**	**3.53**	**26**	**1018**	**4.31**	**31**	- -	- -	- -
7000	1704	427	1.07	9.5	454	1.16	15.5	543	1.51	12.0	650	2.09	15.9	736	2.73	19.3	**883**	**3.71**	**26**	**1019**	**4.50**	**32**	- -	- -	- -
7200	1753	437	1.16	10.0	463	1.25	17.8	547	1.59	12.6	650	2.15	16.0	740	2.83	19.7	**883**	**3.89**	**26**	**1019**	**4.70**	**32**	- -	- -	- -
7400	1801	448	1.26	10.5	473	1.34	11.4	552	1.68	13.5	651	2.21	16.0	743	2.92	20	**884**	**4.07**	**27**	**1020**	**4.91**	**32**	- -	- -	- -
7600	1850	459	1.36	11.1	483	1.44	12.0	557	1.78	14.5	652	2.28	16.1	**746**	**3.01**	**20**	**886**	**4.24**	**28**	- -	- -	- -	- -	- -	- -
7800	1899	470	1.47	11.8	493	1.55	12.8	562	1.88	15.6	653	2.36	16.2	**749**	**3.10**	**20**	**888**	**4.41**	**29**	- -	- -	- -	- -	- -	- -
8000	1948	481	1.58	12.4	503	1.66	13.9	568	1.98	17.0	655	2.45	16.3	**750**	**3.18**	**20**	**891**	**4.57**	**31**	- -	- -	- -	- -	- -	- -
8200	1996	492	1.69	13.1	513	1.78	15.1	574	2.09	18.1	658	2.55	16.5	**751**	**3.26**	**20**	**894**	**4.73**	**32**	- -	- -	- -	- -	- -	- -
8400	2045	503	1.82	13.7	523	1.90	16.3	581	2.20	14.9	661	2.66	16.8	**751**	**3.34**	**20**	**898**	**4.88**	**35**	- -	- -	- -	- -	- -	- -
8600	2094	514	1.95	14.4	534	2.03	17.5	588	2.32	15.5	665	2.78	17.2	**752**	**3.43**	**20**	- -	- -	- -	- -	- -	- -	- -	- -	- -
8800	2142	526	2.08	15.0	544	2.17	19.0	595	2.45	16.1	670	2.91	17.6	**753**	**3.52**	**20**	- -	- -	- -	- -	- -	- -	- -	- -	- -

Performance certified is for installation Type B - Free inlet, Ducted outlet. Power rating bhp does not include drive transmission losses.
Performance ratings do not include the effects of appurtenances (accessories). The sound ratings shown are loudness values in fan sones at 5 ft. (1.5m) in a hemispherical free field calculated per AMCA Standard 301. Values shown are for Installation Type B: free inlet fan sone levels.
Sone values not documented in unlisted areas. Twin unit data is derived from tests of single width fans.

SI CONVERSION FACTOR

CFM x .472 = L/s SP x .249 = kPa

200 & 9200 SERIES PERFORMANCE DATA

Model 218 & 9218

218 - 1" SHAFT, MAXIMUM: 5 HP, 184T FRAME — WHEEL DIA. = 18.19"

9218 - 1" SHAFT, MAXIMUM: 5 HP, 256T FRAME — TIP SPEED = 4.76 x RPM

	OUTLET VELOCITY	1/8" SP			1/4" SP			1/2" SP			3/4" SP			1" SP			1-1/2" SP			2" SP			2-1/2" SP		
CFM	FPM	RPM	BHP	SONES	RPM	BHP	SONES	RPM	BHP	SONES	RPM	BHP	SONES	RPM	BHP	SONES	RPM	BHP	SONES	RPM	BHP	SONES	RPM	BHP	SONES
3000	972	255	0.20	3.0	321	0.29	6.3	429	0.47	- -	533	0.72	- -	615	0.97	- -	748	1.50	- -	860	2.06	- -	957	2.68	- -
3200	1037	264	0.23	3.7	325	0.33	7.6	428	0.51	- -	531	0.77	- -	616	1.03	- -	750	1.59	- -	861	2.16	- -	959	2.79	- -
3400	1102	273	0.27	4.8	330	0.36	5.0	432	0.56	- -	529	0.82	- -	615	1.10	- -	751	1.67	- -	863	2.27	- -	961	2.91	- -
3600	1167	282	0.31	6.5	336	0.41	5.4	437	0.61	- -	526	0.86	- -	614	1.16	- -	753	1.76	- -	865	2.39	- -	963	3.03	- -
3800	1232	292	0.35	8.9	343	0.45	6.0	442	0.67	8.0	523	0.89	- -	613	1.22	- -	754	1.84	- -	867	2.50	- -	965	3.17	- -
4000	1297	302	0.40	10.1	351	0.50	6.6	448	0.74	8.6	526	0.97	- -	610	1.28	- -	754	1.93	- -	868	2.62	- -	967	3.32	- -
4200	1362	312	0.45	11.0	359	0.56	7.2	452	0.81	9.1	530	1.04	- -	607	1.33	- -	754	2.03	- -	869	2.73	- -	969	3.46	- -
4400	1426	323	0.51	6.0	367	0.61	7.8	457	0.88	9.7	534	1.12	- -	604	1.38	- -	752	2.13	- -	870	2.84	- -	970	3.60	- -
4600	1491	334	0.58	6.6	376	0.68	8.5	462	0.95	10.3	540	1.21	11.7	606	1.48	- -	751	2.22	- -	871	2.96	- -	971	3.75	- -
4800	1556	345	0.65	7.4	385	0.75	9.2	466	1.02	9.8	546	1.31	12.5	610	1.58	- -	749	2.31	- -	870	3.09	- -	972	3.89	- -
5000	1621	356	0.72	8.2	395	0.83	9.9	473	1.11	10.3	551	1.41	13.5	615	1.69	- -	746	2.39	- -	869	3.22	- -	973	4.03	- -
5200	1686	367	0.80	8.9	404	0.91	10.5	479	1.20	10.8	555	1.51	15.0	620	1.80	14.4	742	2.46	- -	868	3.35	- -	973	4.18	- -
5400	1751	378	0.89	9.7	414	1.01	11.1	487	1.29	11.3	560	1.61	17.2	627	1.92	15.4	739	2.55	- -	866	3.47	- -	973	4.35	- -
5600	1816	390	0.98	10.6	424	1.10	11.6	494	1.39	11.8	565	1.72	20	632	2.05	16.9	742	2.69	- -	864	3.58	- -	972	4.51	- -
5800	1881	401	1.08	11.4	435	1.21	12.1	502	1.50	12.4	569	1.84	14.4	636	2.18	18.3	746	2.84	- -	861	3.69	- -	971	4.67	- -
6000	1945	413	1.19	12.1	445	1.32	12.6	510	1.61	13.0	575	1.95	14.7	641	2.32	20	750	3.00	- -	857	3.79	- -	969	4.82	- -
6200	2010	424	1.30	12.9	456	1.44	12.3	519	1.73	13.7	581	2.08	15.2	646	2.46	23	755	3.16	- -	853	3.89	- -	967	4.96	- -
6400	2075	436	1.42	13.7	466	1.56	13.1	527	1.85	14.4	588	2.22	15.7	650	2.61	25	761	3.33	20	856	4.08	- -	- -	- -	- -
6600	2140	448	1.55	14.6	477	1.70	14.0	536	1.98	15.2	595	2.36	16.4	655	2.75	17.5	767	3.52	21	859	4.27	- -	- -	- -	- -
6800	2205	460	1.69	15.4	488	1.84	14.8	545	2.13	16.5	603	2.51	17.1	660	2.90	17.9	772	3.71	22	863	4.48	- -	- -	- -	- -
7000	2270	472	1.83	16.2	499	1.98	15.6	555	2.28	18.8	611	2.66	18.2	666	3.07	18.4	777	3.91	23	868	4.69	- -	- -	- -	- -
7200	2335	484	1.98	17.0	510	2.14	16.4	564	2.45	22	619	2.83	19.2	673	3.24	19.1	782	4.11	24	873	4.91	- -	- -	- -	- -
7400	2399	496	2.14	17.9	522	2.31	17.4	574	2.63	26	627	3.00	20	680	3.42	19.7	786	4.32	25	- -	- -	- -	- -	- -	- -
7600	2464	508	2.31	18.7	533	2.48	18.4	584	2.81	30	635	3.18	21	687	3.61	20	791	4.53	27	- -	- -	- -	- -	- -	- -

Model 9218-2

MAXIMUM: 10 HP, 256T FRAME — WHEEL DIA. = 18.19"

1-3/16" SHAFT — TIP SPEED = 4.76 x RPM

	OUTLET VELOCITY	1/8" SP			1/4" SP			1/2" SP			3/4" SP			1" SP			1-1/2" SP			2" SP			2-1/2" SP		
CFM	FPM	RPM	BHP	SONES	RPM	BHP	SONES	RPM	BHP	SONES	RPM	BHP	SONES	RPM	BHP	SONES	RPM	BHP	SONES	RPM	BHP	SONES	RPM	BHP	SONES
6000	972	255	0.40	3.8	321	0.58	7.6	429	0.95	- -	533	1.45	- -	615	1.95	- -	748	3.00	- -	860	4.12	- -	957	5.36	- -
6400	1037	264	0.46	4.7	325	0.65	9.1	428	1.02	- -	531	1.54	- -	616	2.06	- -	750	3.17	- -	861	4.31	- -	959	5.59	- -
6800	1102	273	0.53	5.9	330	0.73	6.1	432	1.12	- -	529	1.63	- -	615	2.19	- -	751	3.34	- -	863	4.54	- -	961	5.82	- -
7200	1167	282	0.61	7.9	336	0.81	6.6	437	1.23	- -	526	1.71	- -	614	2.32	- -	753	3.51	- -	865	4.77	- -	963	6.06	- -
7600	1232	292	0.70	10.7	343	0.90	7.2	442	1.35	9.7	523	1.79	- -	613	2.44	- -	754	3.68	- -	867	5.00	- -	965	6.35	- -
8000	1297	302	0.80	12.1	351	1.00	8.0	448	1.48	10.4	526	1.93	- -	610	2.55	- -	754	3.86	- -	868	5.23	- -	967	6.64	- -
8400	1362	312	0.91	13.3	359	1.11	8.8	452	1.61	11.0	530	2.09	- -	607	2.66	- -	754	4.06	- -	869	5.46	- -	969	6.92	- -
8800	1426	323	1.03	7.3	367	1.23	9.5	457	1.75	11.7	534	2.25	- -	604	2.77	- -	752	4.25	- -	870	5.68	- -	970	7.21	- -
9200	1491	334	1.15	8.1	376	1.36	10.3	462	1.90	12.3	540	2.42	- -	606	2.96	- -	751	4.44	- -	871	5.92	- -	971	7.49	- -
9600	1556	345	1.29	8.9	385	1.50	11.1	466	2.05	12.0	546	2.61	15.1	610	3.16	- -	749	4.61	- -	870	6.18	- -	972	7.78	- -
10000	1621	356	1.44	9.9	395	1.66	11.9	473	2.21	12.6	551	2.81	16.2	615	3.37	- -	746	4.78	- -	869	6.44	- -	973	8.05	- -
10400	1686	367	1.60	10.8	404	1.83	12.6	479	2.39	13.2	555	3.02	17.9	620	3.60	- -	742	4.93	- -	868	6.69	- -	973	8.37	- -
10800	1751	378	1.78	11.8	414	2.01	13.3	487	2.58	13.8	560	3.23	21.0	627	3.84	18.5	739	5.10	- -	866	6.93	- -	973	8.70	- -
11200	1816	390	1.96	12.8	424	2.21	14.0	494	2.78	14.4	565	3.45	25.0	632	4.10	20	742	5.38	- -	864	7.16	- -	972	9.02	- -
11600	1881	401	2.16	13.7	435	2.42	14.7	502	2.99	15.0	569	3.67	17.0	636	4.37	22	746	5.68	- -	861	7.38	- -	971	9.33	- -
12000	1945	413	2.38	14.7	445	2.64	15.2	510	3.21	15.6	575	3.91	17.5	641	4.64	24	750	5.99	- -	857	7.58	- -	969	9.63	- -
12400	2010	424	2.60	15.5	456	2.87	14.9	519	3.45	16.4	581	4.16	18.1	646	4.92	27	755	6.32	- -	853	7.78	- -	967	9.92	- -
12800	2075	436	2.84	16.5	466	3.12	15.8	527	3.70	17.2	588	4.43	18.9	650	5.21	30	761	6.67	- -	856	8.16	- -	- -	- -	- -
13200	2140	448	3.10	17.4	477	3.39	16.7	536	3.96	18.2	595	4.72	19.6	655	5.50	21	767	7.03	25	859	8.55	- -	- -	- -	- -
13600	2205	460	3.37	18.4	488	3.67	17.7	545	4.25	19.7	603	5.02	20	660	5.81	21	772	7.42	26	863	8.96	- -	- -	- -	- -
14000	2270	472	3.66	19.4	499	3.97	18.7	555	4.57	23	611	5.33	22	666	6.14	22	777	7.81	27	868	9.38	- -	- -	- -	- -
14400	2335	484	3.97	20	510	4.28	19.7	564	4.90	26	619	5.65	23	673	6.48	23	782	8.22	29	873	9.83	- -	- -	- -	- -
14800	2399	496	4.29	21	522	4.61	21	574	5.25	32	627	5.99	24	680	6.85	24	786	8.63	31	- -	- -	- -	- -	- -	- -
15200	2464	508	4.63	22	533	4.96	22	584	5.62	36	635	6.35	26	687	7.22	24	791	9.06	32	- -	- -	- -	- -	- -	- -

Performance certified is for installation Type B - Free inlet, Ducted outlet. Power rating bhp does not include transmission losses.
Performance ratings do not include the effects of appurtenances (accessories). The sound ratings shown are loudness values in fan sones at 5 ft. (1.5m) in a hemispherical free field calculated per AMCA Standard 301. Values shown are for Installation Type B: free inlet fan sone levels.
Sone values not documented in unlisted areas. Twin unit data is derived from tests of single width fans.

SI CONVERSION FACTOR

CFM x .472 = L/s **SP x .249 = kPa**

200 & 9200 SERIES PERFORMANCE DATA

Model 9220

MAXIMUM: 15 HP, 256T FRAME

1-7/16" SHAFT

WHEEL DIA. = 20.44"

TIP SPEED = 5.35 x RPM

CFM	OUTLET VELOCITY FPM	1/8" SP RPM	BHP	SONES	1/4" SP RPM	BHP	SONES	1/2" SP RPM	BHP	SONES	3/4" SP RPM	BHP	SONES	1" SP RPM	BHP	SONES	1-1/2" SP RPM	BHP	SONES	2" SP RPM	BHP	SONES	2-1/2" SP RPM	BHP	SONES
6000	1303	336	0.84	13.3	373	1.00	9.1	446	1.35	7.6	511	1.75	10.0	569	2.14	11.8	674	2.99	16.6	765	3.86	20	845	4.75	23
6250	1357	347	0.94	14.7	382	1.10	9.8	453	1.46	8.0	517	1.87	10.3	574	2.28	12.1	678	3.15	17.1	768	4.06	20	848	4.95	24
6500	1411	358	1.04	14.4	392	1.21	10.5	461	1.58	8.5	523	2.00	10.6	580	2.43	12.4	682	3.31	18.1	772	4.26	21	852	5.19	24
6750	1465	370	1.15	14.1	402	1.33	11.2	468	1.71	8.9	530	2.13	10.5	585	2.58	12.7	685	3.47	18.7	776	4.46	21	855	5.43	24
7000	1520	381	1.27	13.8	412	1.46	11.8	476	1.85	9.4	536	2.28	10.9	591	2.74	13.2	690	3.66	19.8	780	4.67	21	859	5.68	25
7250	1574	392	1.40	13.6	423	1.59	12.3	484	1.99	9.8	543	2.42	11.4	597	2.90	13.7	695	3.86	21	783	4.88	22	863	5.93	25
7500	1628	404	1.54	13.5	433	1.73	12.7	492	2.14	10.3	551	2.58	11.9	604	3.07	14.5	700	4.06	22	787	5.09	22	867	6.19	25
7750	1683	415	1.68	13.3	444	1.88	13.2	500	2.30	10.7	558	2.75	12.3	610	3.25	14.0	705	4.28	24	791	5.31	22	871	6.45	26
8000	1737	427	1.84	13.3	455	2.05	13.3	509	2.47	11.2	565	2.94	12.8	617	3.44	14.5	711	4.50	25	795	5.55	23	874	6.71	26
8250	1791	439	2.00	13.3	465	2.22	13.3	518	2.65	11.8	573	3.13	13.4	624	3.63	15.0	716	4.72	27	800	5.81	23	878	6.97	26
8500	1845	450	2.18	13.3	476	2.40	13.3	528	2.84	12.4	581	3.33	14.0	631	3.84	15.5	722	4.96	29	805	6.08	24	882	7.24	27
8750	1900	462	2.36	13.3	487	2.59	13.4	537	3.05	12.9	588	3.54	14.5	638	4.05	16.0	728	5.20	31	810	6.36	25	885	7.51	27
9000	1954	474	2.56	13.3	498	2.79	13.5	547	3.26	13.5	596	3.76	15.1	646	4.29	16.7	735	5.45	33	815	6.64	26	890	7.83	27
9250	2008	486	2.77	13.4	510	3.00	13.6	557	3.48	14.1	604	3.99	15.7	653	4.53	17.3	741	5.71	36	821	6.94	27	895	8.15	28
9500	2063	498	2.98	13.5	521	3.22	13.7	567	3.72	14.8	613	4.23	16.8	661	4.79	18.0	748	5.98	20	827	7.24	28	900	8.49	28
9750	2117	509	3.21	13.6	532	3.46	14.0	577	3.97	15.7	622	4.48	18.0	668	5.05	19.1	754	6.26	21	833	7.55	29	905	8.84	29
10000	2171	521	3.45	13.7	543	3.71	14.5	587	4.22	17.0	631	4.75	19.5	676	5.33	20	761	6.55	21	839	7.87	31	910	9.19	29
10250	2226	533	3.70	14.0	555	3.96	15.1	598	4.49	18.9	640	5.04	21	684	5.62	22	768	6.85	22	845	8.20	32	916	9.56	30
10500	2280	545	3.96	14.6	566	4.23	15.7	608	4.78	21	650	5.33	23	692	5.91	23	776	7.16	22	851	8.54	33	921	9.93	30
10750	2334	557	4.23	15.2	578	4.52	16.6	619	5.07	24	659	5.64	26	700	6.22	24	783	7.48	23	858	8.90	34	927	10.32	31
11000	2388	568	4.52	15.8	589	4.81	18.2	629	5.38	27	669	5.96	29	709	6.55	25	790	7.84	24	864	9.26	26	933	10.71	31
11250	2443	580	4.82	16.9	601	5.12	20	640	5.70	31	679	6.29	34	718	6.89	27	798	8.21	24	871	9.63	27	939	11.12	32
11500	2497	592	5.13	18.7	613	5.45	23	651	6.04	36	689	6.64	36	727	7.25	28	805	8.59	25	878	10.01	27	946	11.53	33
11750	2551	604	5.46	21	624	5.78	26	662	6.38	41	699	7.00	38	736	7.62	29	813	8.98	26	885	10.41	28	952	11.96	33
12000	2606	616	5.80	24	636	6.13	29	673	6.75	48	709	7.37	39	746	8.01	30	820	9.38	26	892	10.81	29	958	12.40	34

Model 9220-2

MAXIMUM: 40 HP, 326T FRAME

2-1/4" SHAFT

WHEEL DIA. = 20.44"

TIP SPEED = 5.35 x RPM

CFM	OUTLET VELOCITY FPM	1/8" SP RPM	BHP	SONES	1/4" SP RPM	BHP	SONES	1/2" SP RPM	BHP	SONES	3/4" SP RPM	BHP	SONES	1" SP RPM	BHP	SONES	1-1/2" SP RPM	BHP	SONES	2" SP RPM	BHP	SONES	2-1/2" SP RPM	BHP	SONES
12000	1303	336	1.69	16.0	373	2.00	11.0	446	2.70	9.2	511	3.50	12.1	569	4.29	14.4	674	5.99	19.8	765	7.72	24	845	9.50	28
12500	1357	347	1.88	17.9	382	2.21	11.8	453	2.92	9.6	517	3.74	12.5	574	4.57	14.7	678	6.30	20	768	8.11	24	848	9.89	29
13000	1411	358	2.09	17.3	392	2.43	12.6	461	3.16	10.3	523	4.00	12.9	580	4.86	15.0	682	6.62	22	772	8.52	25	852	10.38	29
13500	1465	370	2.31	16.9	402	2.66	13.3	468	3.42	10.8	530	4.27	13.0	585	5.16	15.4	685	6.95	22	776	8.92	25	855	10.87	29
14000	1520	381	2.55	16.6	412	2.91	14.1	476	3.69	11.3	536	4.55	13.3	591	5.47	15.9	690	7.32	24	780	9.34	25	859	11.36	30
14500	1574	392	2.80	16.3	423	3.18	14.7	484	3.97	11.9	543	4.85	13.9	597	5.80	16.5	695	7.72	25	783	9.76	26	863	11.87	30
15000	1628	404	3.08	16.2	433	3.47	15.3	492	4.27	12.5	551	5.16	14.5	604	6.15	17.3	700	8.13	27	787	10.19	26	867	12.38	31
15500	1683	415	3.37	16.1	444	3.77	15.8	500	4.59	13.1	558	5.50	15.0	610	6.51	16.9	705	8.55	29	791	10.62	27	871	12.89	31
16000	1737	427	3.68	15.9	455	4.09	15.9	509	4.94	13.7	565	5.87	15.5	617	6.88	17.4	711	8.99	31	795	11.10	27	874	13.42	31
16500	1791	439	4.01	15.7	465	4.43	15.9	518	5.30	14.3	573	6.26	16.2	624	7.27	17.9	716	9.45	33	800	11.62	28	878	13.95	32
17000	1845	450	4.36	15.9	476	4.79	16.0	528	5.69	15.1	581	6.66	16.8	631	7.67	18.6	722	9.92	35	805	12.16	29	882	14.48	32
17500	1900	462	4.73	15.9	487	5.17	16.1	537	6.09	15.7	588	7.08	17.4	638	8.09	19.2	728	10.40	38	810	12.71	30	885	15.02	32
18000	1954	474	5.12	16.0	498	5.58	16.2	547	6.52	16.4	596	7.52	18.1	646	8.57	20	735	10.91	41	815	13.28	31	890	15.65	33
18500	2008	486	5.53	16.1	510	6.00	16.4	557	6.97	17.1	605	7.97	18.9	653	9.06	21	741	11.43	43	821	13.87	33	895	16.31	33
19000	2063	498	5.97	16.2	521	6.45	16.6	567	7.44	18.0	613	8.45	20	661	9.58	22	748	11.97	24	827	14.48	34	900	16.98	34
19500	2117	509	6.42	16.4	532	6.92	17.1	577	7.93	18.9	622	8.97	22	668	10.11	23	754	12.53	25	833	15.10	36	905	17.67	34
20000	2171	521	6.90	16.6	543	7.41	17.7	587	8.45	20	631	9.51	23	676	10.66	24	761	13.10	25	839	15.75	37	910	18.38	35
20500	2226	533	7.40	17.1	555	7.93	18.3	598	8.99	22	640	10.07	25	684	11.24	26	768	13.70	26	845	16.41	39	916	19.11	36
21000	2280	545	7.92	17.8	566	8.47	19.0	608	9.55	25	650	10.66	28	692	11.83	28	776	14.32	27	851	17.09	40	921	19.86	36
21500	2334	557	8.47	18.4	578	9.03	20	619	10.14	29	659	11.28	31	700	12.45	29	783	14.96	28	858	17.79	42	927	20.63	37
22000	2388	568	9.04	19.1	589	9.63	21	629	10.76	33	669	11.92	36	709	13.10	30	790	15.68	28	864	18.52	31	933	21.42	38
22500	2443	580	9.64	20	601	10.25	24	640	11.40	38	679	12.58	41	718	13.79	32	798	16.41	29	871	19.26	32	939	22.23	39
23000	2497	592	10.26	22	613	10.89	28	651	12.07	43	689	13.28	44	727	14.50	34	805	17.17	30	878	20.03	33	946	23.07	40
23500	2551	604	10.91	25	624	11.57	31	662	12.77	50	699	14.00	47	736	15.25	35	813	17.96	31	885	20.82	34	952	23.92	40
24000	2606	616	11.59	28	636	12.27	36	673	13.50	59	709	14.75	49	746	16.02	37	820	18.76	32	892	21.63	34	958	24.80	41

Performance certified is for installation Type B - Free inlet, Ducted outlet. Power rating bhp does not include transmission losses.
Performance ratings do not include the effects of appurtenances (accessories). The sound ratings shown are loudness values in fan sones at 5 ft. (1.5m) in a hemispherical free field calculated per AMCA Standard 301. Values shown are for Installation Type B: free inlet fan sone levels.
Sone values not documented in unlisted areas. Twin unit data is derived from tests of single width fans.

SI CONVERSION FACTOR

CFM x .472 = L/s SP x .249 = kPa